Reg. No. [ ][ ][ ][ ][ ][ ][ ][ ][ ][ ] [14ME54]

# FIFTH SEMESTER B.Tech EXAMINATION, DECEMBER-2018

## DYNAMICS OF MACHINES

Time:3 Hours Maximum Marks:70

Instructions: i. Answer any **FIVE** full Questions choosing atleast two from each part.

ii. Missing data may be suitably assumed.

### PART - A

1. a. With usual notations explain the principle of virtual work considering slider crank mechanism. 04

b. Determine the torque to be applied on the link AB for static equilibrium of the mechanism shown in fig 1b. 10

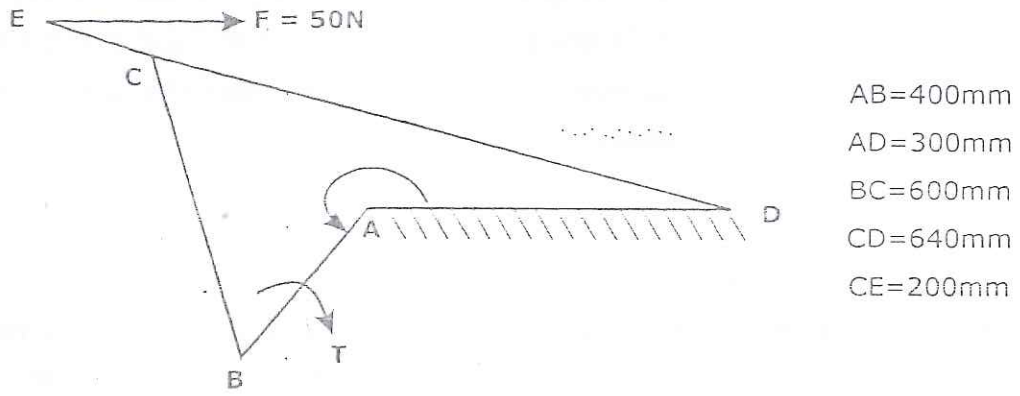


Fig. 1b

2. a. State and explain D Alembert's Principle. 04

b. A four bar mechanism under the action of two external forces are shown in fig 2b. Determine the torque to be applied on the link AB for static equilibrium by virtual work method. AB=50mm, BC=66mm, CD=55mm, CE=25mm, CF=30mm, AD=100mm, angle BAD=60° 10

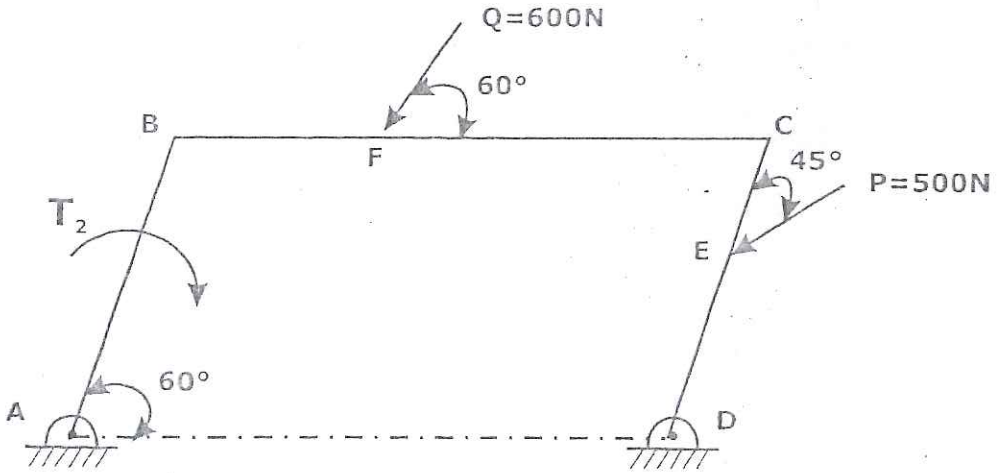


Fig. 2b

3. a. Explain Turning moment diagram for single cylinder double acting steam engine. 04

b. A double acting steam engine develops 350kW at 120rpm. It is fitted with a flywheel of radius of gyration=2.5m. The coefficient of fluctuation of energy=0.3 The speed of flywheel is not to deviate more than 0.5% from the mean speed. Find the mass of flywheel. 10

4. A shaft running in bearings carries masses 20, 30, 40 Kg in planes A,B & C with CG from the axis of the shaft 30mm, 20mm and 15mm respectively. The distances of planes B&C from A are 1000mm and 2000mm to the right of A. The relative angular positions of the CG of the unbalanced masses are such that they are in static balance. To obtain complete dynamic balance suitable masses are introduced in planes D & E with centre gravity 100 mm from the axis, D is 500mm to the left of A and E is 500 mm to right of C. Determine the position and magnitude of the balancing masses. 14

## PART - B

5. a. Explain partial primary balancing. 04

b. The positions of a four cylinder vertical in line engine reach their upper most position at $90^0$ intervals in order of their actual position. Pitch of the cylinder =0.35m, crank radius = 0.12m, length of CR= 0.42m. The engine runs at 600 rpm. If the reciprocating parts of each engine have a mass of 2.5 Kg, find the unbalanced primary and secondary forces and couples. Take centre plane of engine as a reference plane. 10

6. a. Derive an expression for finding angle of heel of a two wheel which negotiating a curve. 07

b. The rotor of a turbine of a ship has a mass of 2500kg and rotates at a speed of 3200 rpm counter clock wise when viewed from stern. The rotor has radius of gyration of 0.4m. Determine the gyroscopic couple and its effect when: i) the ship steers to the left in curve of a 80m at a speed of 27900m/hr. ii) the ship pitches $5^0$ above and $5^0$ below the normal position and the bow is descending with its maximum velocity. 07

The pitching motion is simple harmonic motion with periodic time of 40sec.

7. For symmetrical tangent cam operating a roller follower with a radius of 15mm. the angle of ascent is $60^0$. The total lift is 15mm and the speed of the cam shaft is 300rpm. Calculate: 14

i. Principal dimension of the cam

ii. Acceleration of the follower at the beginning of the lift, where the roller touches its nose, at the apex of the nose. Assume that there is no dwell between ascent and descent.

8. a. Define the following: 04

i. Sensitiveness

ii. Governor effort

iii. Governor power

iv. Hunting

v. Stability

b. A porter governor has equal arms each 250mm long pivoted on the axis of the rotation. Each ball has a mass of 5kg and mass of central load on the sleeve is 25 kg. The radii of rotation of the ball are 150mm when the governor begins to lift and 200mm when the governor is at maximum speed. Find the range of speed, sleeve lift, governor effort and power of the governor in the following cases: 10

i. when the friction at sleeve is neglected

ii. When the friction at the sleeve is 10N.